Layout diagram

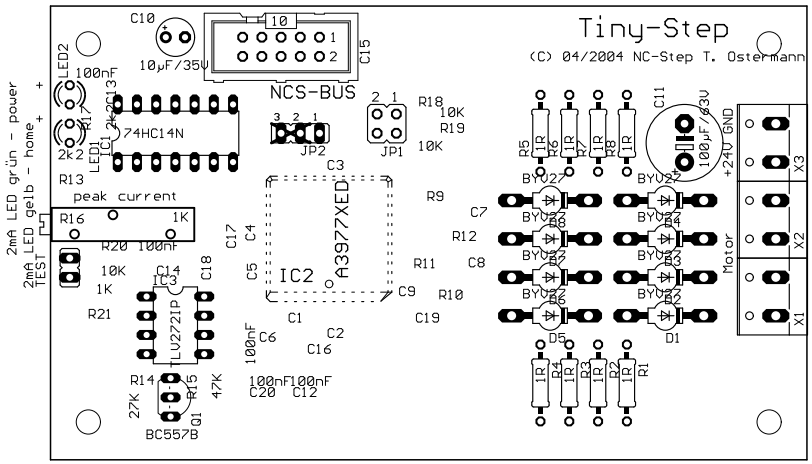

Dimensions

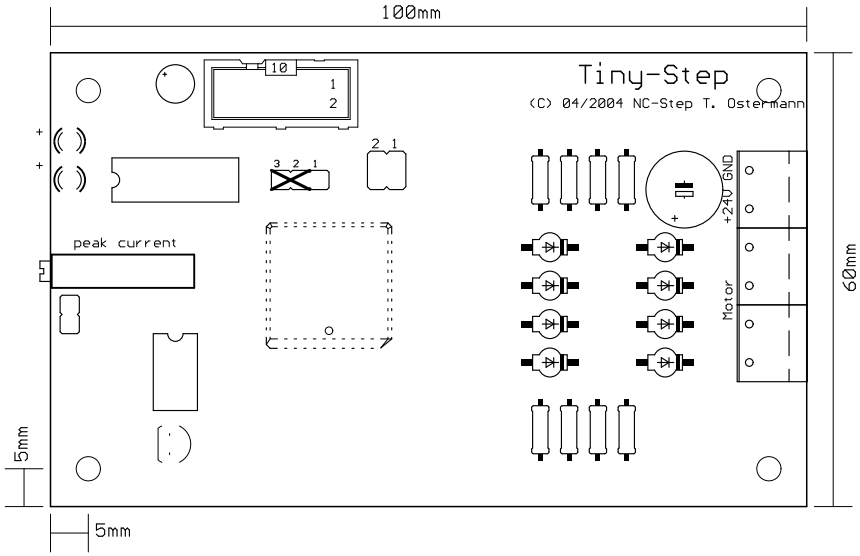

mechapro
DIPL.-ING. T. OSTERMANN

Assembly Instructions

Stepping Motor Board >Tiny-Step<

Rev. 1.0 (last updated 15.07.2008)

Functional description:

Tiny-Step is a 1 channel stepping motor driver, that can drive motors with up to 2.25 amperes (peak) in full-, half-, fourth- or eighth-step mode. The board is based on the A3977 that supports all features of microstep signal generation and includes the amplifier. The signal / SLEEP can reduce motor current by 25%. The /e-STOP signal switches off the amplifier directly. The HOME-LED signals every fourth full step for a simple signal in case steps are lost. The board is delivered partially fitted with components (all SMD parts).

Disclaimer, EMC-compliance

Even though all parts of the circuitry have been thoroughly checked and tested, mechapro does not give any warranty or other assurance as to the operation or functionality of the circuitry or the documentation.
To the full extent permissible by law we disclaim all responsibility for any damages or losses (including, without limitation, financial loss, damages for loss in business projects, loss of profits or other consequential losses) arising from the use or reproduction and/or operation of the presented circuitry.
The stepper motor driver card Tiny-Step is an OEM-product for further processing by industry or other, in electronics specialized, personal. In line with §5 of the EMC-regulation the Tiny-Step driver card does not have to carry a CE-Label. Wiring and the individual components being used as well as the complete environment in which the controller card is operated will influence its EMC behaviour. Therefore, if CE-compliance is required, a system in which one or more Tiny-Step driver cards have been installed for operation has to be evaluated as a whole unit. Of course, when developing the circuitry for the Tiny-Step all possible aspects for an EMC-suitable design have been taken into account.

Fitting with Components

- Start with the small components (resistors, diodes, capacitors, ...)
- Be careful to assemble with correct polarity (diodes, electrolytic capacitors, ...)
- The ICs should be mounted on sockets as a precaution.
- A heat sink is not necessary. The amplifier is cooled by a thermal ground pad on the board. In use, depending on the environment, it may be necessary to use an additional fan for cooling. If the casing is already well ventilated, it may not be necessary to use an additional fan, if the board is mounted in the air-stream.

Initial Operation

- Before first use, the assembly and all solder points should be carefully checked! Are all ICs mounted in the correct direction? All cables on the NCS-BUS and the solder points should be checked for short circuits.

ostermann@mechapro.de • www.mechapro.de
Adress: Theaterplatz 6-8 • 52062 Aachen • Germany

• The jumpers should be set to the default values as described below.
• Start with only the 5V logic supply (via NCS-BUS) - without applying power to the motors and with no other connections (PC, Motors).
• Set the reference voltage for the Motor current with the R16 trimmer. The voltage can be measured between the TEST pins. The measured voltage V(ref) depends on the motor current (effective value) in the following way:
V(ref)=2*Squareroot(2)*I_{eff}(Motor)=2,83*I(Motor) equals the nominal value for the line current. The peak current I_{peak} is greater by the factor of Squareroot(2) - (max. 2,25A). For 1,5A_{eff} for example you would set the system to 4,24 volts.
• When all of this has been tested and verified, the board can be tested with a motor.
To do this, connect the board to the PC or microcontroller board. Always start up the PC first, then start the software and then switch on the power supply for the board!
During boot up the power levels of some signal levels can change, that can cause undesired reactions. For tests a free demo (for example PCNC) or a small self written program is recommended.
If possible, start by applying a small voltage to the motor (15-20V), from a current limiting power supply.

JP1: Step Divider

Jumper	JP1.2	JP1.1
Full Steps	closed	closed
Half Steps	open	closed
1/4 Steps	closed	open
1/8 Steps	open	open

JP2: External rectification

The default setting (jumper set to 2-3) disables the „synchronous rectification", and so reduces power dissipation in the device. When no external diodes are used, change jumper setting to 1-2. Caution: The maximum current of the board will be lowered in this configuration!

External Connections

• The motor is connected to the screw connectors X1 (1. Coil) and X2 (2. Coil). The rotational direction of the motor can be changed by reversing the polarity of one coil.
Center pins of unipolar motors (with 5 or 6 pins) are not connected. The pins must be insulated and may not be connected to the positive supply or ground in any case!
Bipolar motors with 8 pins provide the possibility to connect two coil pairs in series or in parallel. In series will always work. Connecting the coils in parallel may allow faster revolutions, however the current is doubled as well (in comparison with the serial setup). The coil resistance is halved in this case and the coil resistance should not be below 0.8 Ohms.
• To connect the board to the PC an interface board with a seperate connection for End-point- and Emergency-Off-Switches is available. Alternatively an adapter cable can be used.
• When no interface board is used, pull all inputs of the board to VCC/+5V (or to ground) with pullup resistors (10-47k).

Pinout of CON1 (NCS-BUS)

1 not connected (n.c.)
2 /Clock (Clock signal, falling edge generates a step)
3 not connected (n.c.)
4 /CCW (rotational direction, counterclockwise at low-level)
5 /Emergency Off (at low-level)
6 /Sleep (current reduction to 25% of the nominal current at low-level)
7,8 VCC (+5 Volts)
9,10 Ground

Meaning of LEDs

POWER: Turns on as soon as 5 Volts are applied to CON1
HOME: Lights up at every fourth full step position (Home position)

Hints for Troubleshooting

- If any part of the circuit does not work after first assembly, or when a failure occurs, find and fix the error, before connecting or running a motor with the circuit! These additional hints may be of help:

If these hints and the additional help at www.NC-Step.de don't answer all your questions, contact me for further help, by email. Please provide a detailed description of the problem and your configuration. (Power supply, used Software a.s.o.) -> E-Mail: Ostermann@NC-Step.de

Component List (without SMD-Parts)

Qty.	Value	Package	Parts	
8	1R	R-EU_0207/10	R1, R2, R3, R4, R5, R6, R7, R8	
8	BYV27	BYV27	D1, D2, D3, D4, D5, D6, D7, D8	
1	1K	R-TRIMMT18	R16	
1	BC557B	BC557B	Q1	
1	lcLED yellow - home		LED3MM	LED1
1	lcLED green - power		LED3MM	LED2
1	10µF/35V	CPOL-EUE2.5-5	C10	
1	100µF/63V	CPOL-EUE5-10.5	C11	
1	Pinh. 1*2	JP1E	TEST	
1	Pinh. 1*3	JP2E	JP2	
1	Pinh. 2*2	JP2QE	JP1	
1	Connector-ML 10pol.		ML10	CONTROL
2	Pinhead 10pol.			
3	Screw Connector		W237-02P	X1, X2, X3
1	DIL8	IC-Sockel		
1	DIL14	IC-Sockel		
3	Jumper			
1	TLV272IP	TLV272IP	IC3	
1	74HCT14N	74HC14N	IC1	

0,5m ribbon cable 10pol.

Additional Notes

- A well stabilized motor voltage saves time and work, when searching for errors and reduces noise levels. (Rule of thumb: 10.000µF for 3 motors (a lot helps a lot ;-)
- The 1 kOhm SMD resistors (R20, R21) should be adjusted according to the used LEDs if low current LEDs are not used (Approximation: (5V - U_Diode)/I_Diode = R, e.g. (5V-1V) / 15mA = 270 Ohm).

Technical Data

Power Supply (Logic):	5 Volts +/- 5%
Power Drain (Logic):	typical 75mA, maximum 100mA
Power Supply (Power Element):	15-35 Volts
Power Drain (Power Element):	dependent on Power Supply Voltage, Motor current and used Motor. Maximum Continuous Current: 2 Amperes.
Control:	Clock- and Direction signals, CMOS-compatible.
Step Resolution:	Full-, Half-, 1/4th and 1/8th-Steps
Outputs:	1 stepping motor channel up to 1.6/2.25A (effective/peak) per coil, not short circuit protected

notes

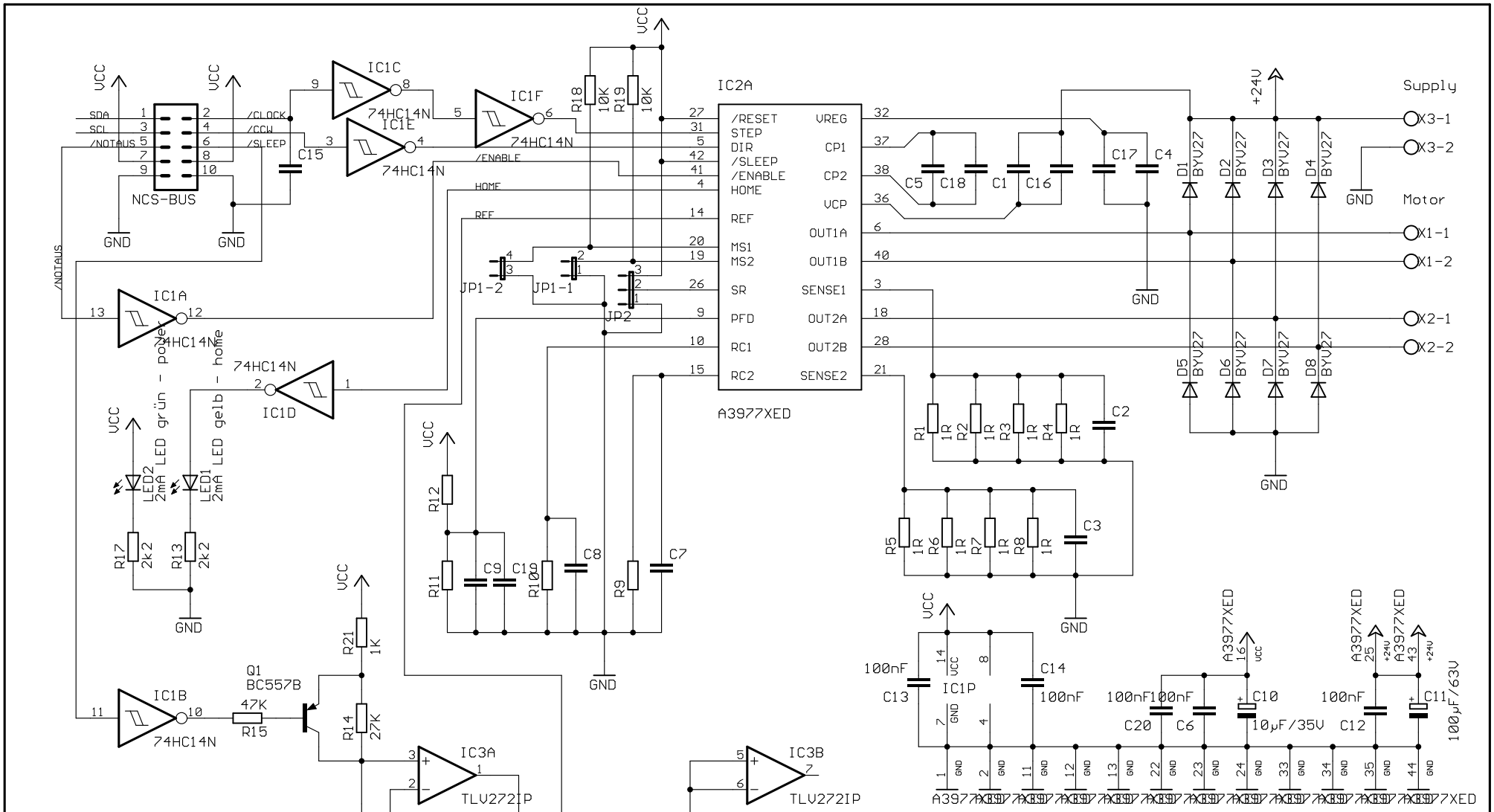

Tiny Step

(C) 03/2004 T. Ostermann - www.NC-Step.de

TITLE: tiny-step_doku

Document Number:

REV: 1.0

Date: 09.04.2004 08:57:30

Sheet: 1/1